Arduino Shields

- Arduino shields are modular circuit boards that plug directly onto Arduino boards and provide additional features, such as motor control, communication interfaces, displays, and sensor integration.
- They are used to add new capabilities like Wi-Fi, Ethernet, motor drivers, relays, LCDs, Bluetooth, and sensors.

Popular Types of Arduino Shields

- **Ethernet Shield:** it is used to Add internet connectivity.
- **Relay Shield:** Controls high-current devices such as motors and lamps.
- **Motor Driver Shield (L293D):** Controls DC motors, servos, and stepper motors for robotics projects.
- **LCD Keypad Shield:** Offers an LCD display and buttons for user interfaces.
- **Bluetooth and Xbee Shields:** Enable wireless communication.
- **CAN-BUS Shield:** Provides automotive or industrial CAN networking.
- **Data Logger Shield:** Records sensor data to SD cards.
- **Various Sensor Shields**: Simplify interfacing with multiple sensors in data collection or monitoring applications.

- **Peripheral shields:** for connecting stepper motors, multiple servo motors and high current DC motors.
- **Prototyping shields:** (kind of zero pcb for DIY designs)

Some examples

Example of Arduino Shields. Arduino Motor Shield Rev3.

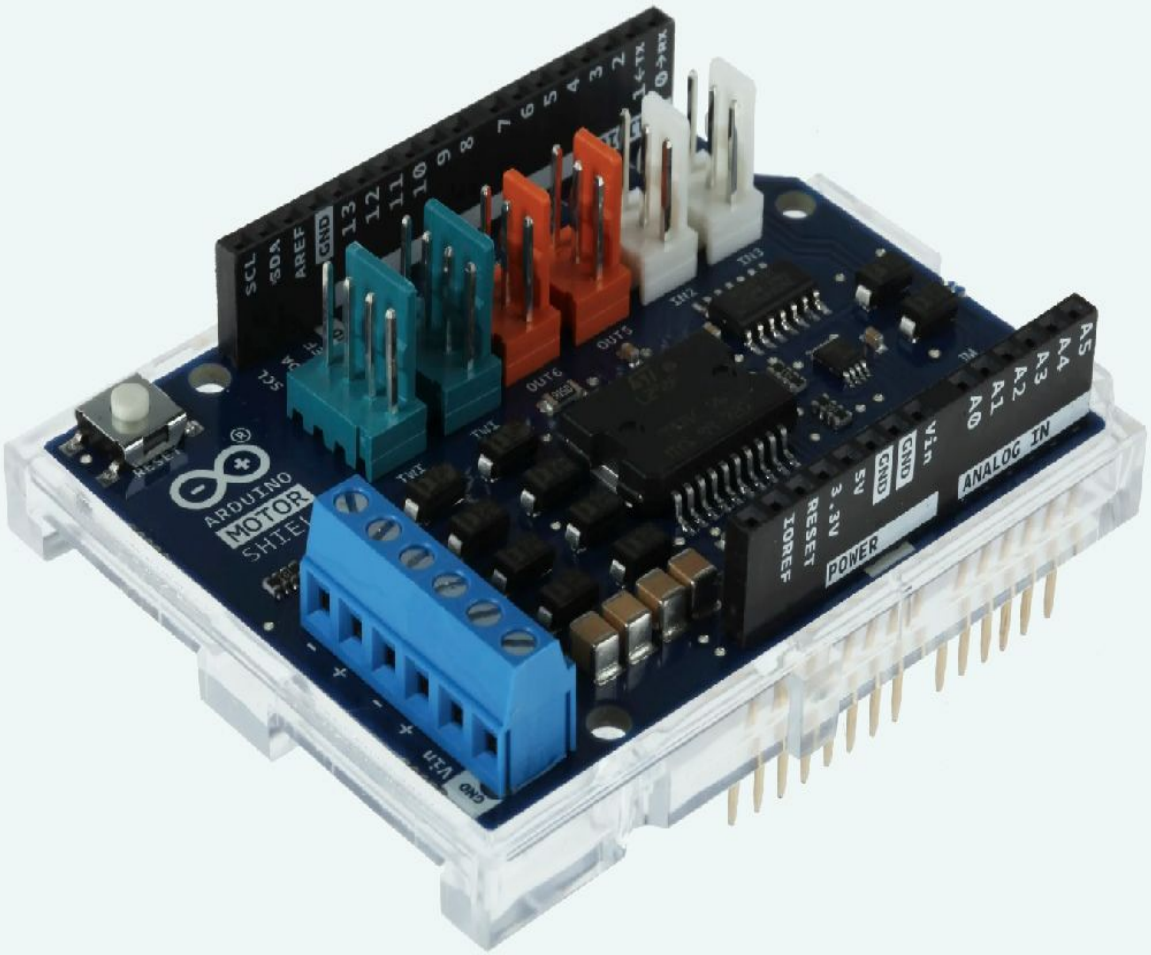

svitla.com

Cont…

Arduino Education Shield.

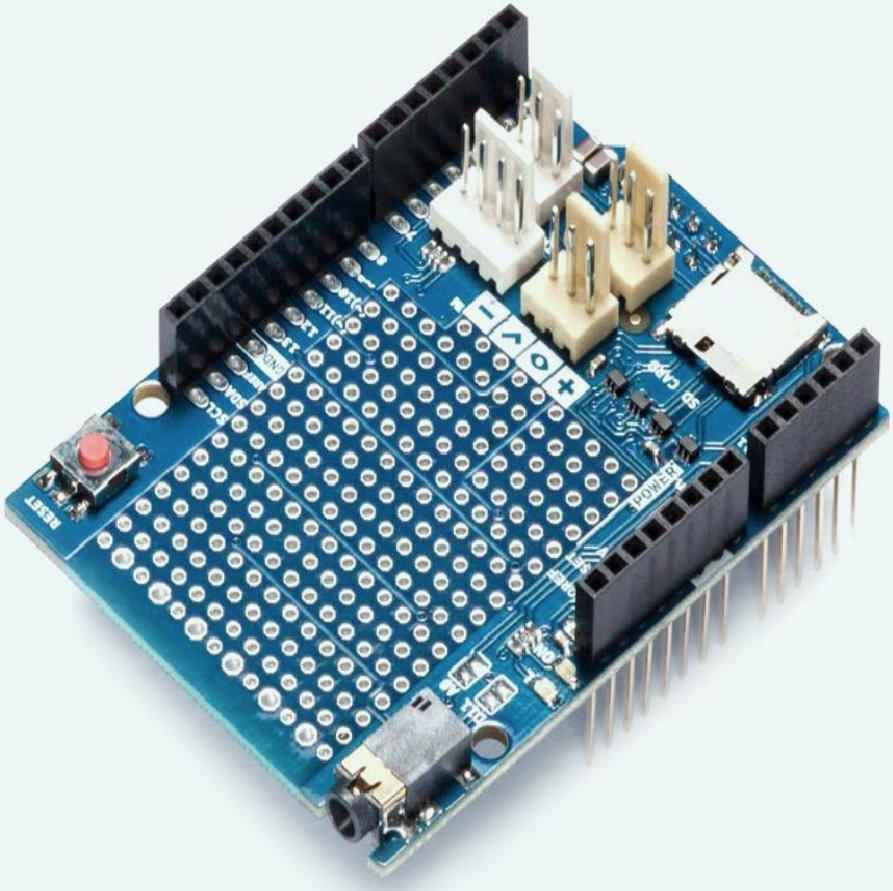

svitla.com

Cont…

Example of Arduino Board with Arducam Mini Module Camera Shield.

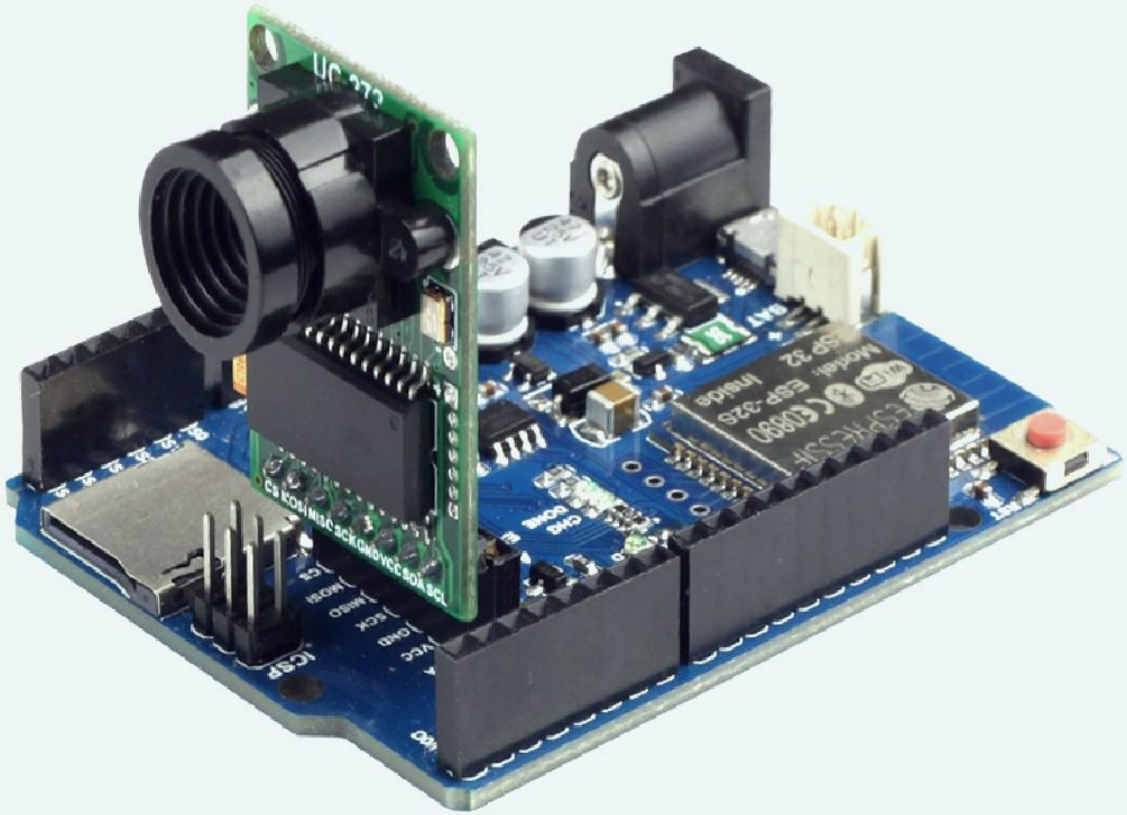

svitla.com

Cont…

Cont…

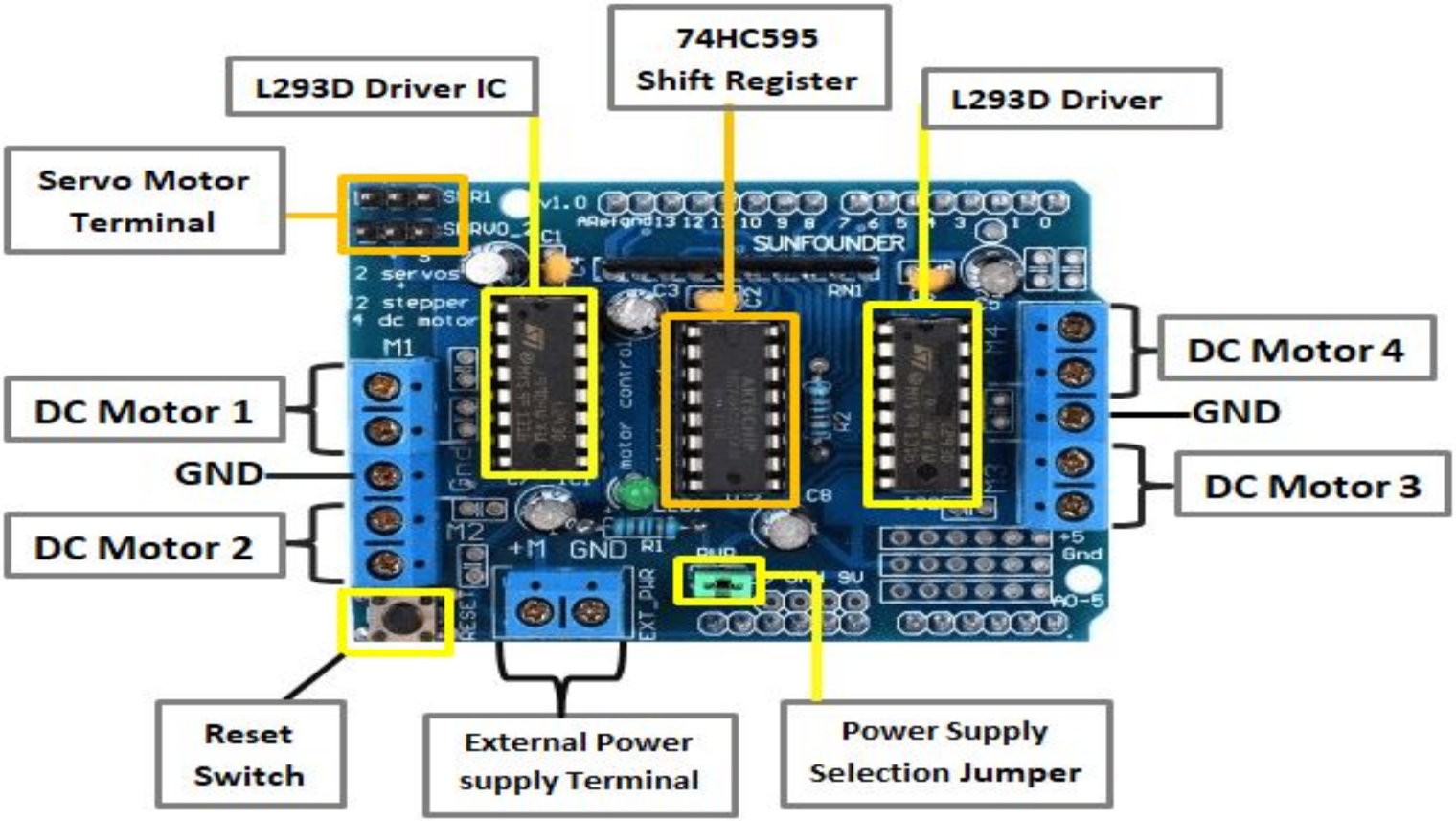

L293D Motor Driver/Servo Shield for Arduino is an Arduino-based L293D motor driver shield, the 74HC595 shift register acts as an expander, converting a few microcontroller pins (like an Arduino's) into the many needed to control the direction of multiple L293D motor drivers.